COFDM System: *Overview*

Mhnd Farhan
Baghdad University, Iraq,
mhndfarhan@yahoo.com

Abstract

This article compares the performance of two modulation techniques—quadrature phase shift keying (QPSK) and quadrature M-ARY AMPLITUDE MODULATION (M-QAM) with M=8, 16, 32, and 64 in a coded orthogonal frequency division multiplexing system. As an error correction code, convolutional technology is used. Vehicle channels with white gaussian noise (AWGN) additives are used for communication. According to simulation data, for QPSK and M-QAM, coded orthogonal frequency division multiplexing systems perform better than uncoded ones. In addition, the system performs better with QPSK than with M-QAM. In addition, when M rises, performance decreases.

Keywords: *COFDM, M-QAM, QPSK, AWGN*

I. INTRODUCTION

As per the Orthogonal Frequency Division Multiplexing (OFDM) standard, one high-rate information stream is divided into several lower-rate streams that are simultaneously transmitted across a number of smaller sub-channels. By carefully selecting subcarrier separation, such as by setting subcarrier separation to fit the valuable drawing time frame, it is possible to achieve orthogonality in OFDM. The range of each subcarrier has an invalid repetition in the middle of each alternate subcarrier in the framework because the subcarriers are orthogonal

As it offers a significant reduction in balancing multi-sided quality compared to conventional correction processes, OFDM has gained more popularity in recent decades. Other interesting elements include combating inter-symbol interference (ISI) and inter-carrier interference (ICI), which cause the multiplicity of receivers to decrease. OFDM also offers excellent phantom effectiveness. In addition, OFDM is more resistant to recurrence specific fading. Many recently published works have analyzed the OFDM system for its tremendous benefits and wide use [1-7].

There are several obstacles to OFDM. The main disadvantage is that when subcarriers are intelligently inserted, OFDM frameworks with a large number of sub-carriers have a very high peak-to-average power ratio (PAPR). In addition, compared to single-carrier modulation systems, OFDM is more sensitive to Doppler deployment. In addition, defects in transmitter and receiver oscillators result in defects in information signals that affect how they operate.

Proper frequency interleaving and encoding are essential to take advantage of the respectable variations provided by multi-path fading. In most OFDM applications, coding thus becomes an integral component. Many studies have focused on the appropriate encoder, decoder, and between leaver plans for data transmission using OFDM over fading environments, as in references [8–9]

Despite the fact that many studies have focused on developing and using coded OFDM frameworks for frequency-specific fading channels, only a small number of studies have provided useful performance analysis of these frameworks due to the unclear nature of the issue. In this case, frequency-selective quasi-static fading channels are taken into account. This is a logical assumption for indoor wireless environments that exhibit multi-path fading but ultimately exhibit mild changes, characterized as semi-static. In contrast to encoding in Additive White Gaussian Noise (AWGN) channels, where one dominant channel pair error probability is related to block code minimum spacing or convolutional code clearances determine framework performance, all channel pair error probabilities in fading channels are equal. Coded OFDM systems decline as mockery polynomials from sign to commotion (SNR) proportions. Thus Cherno's strong association bound would be too free at the SNR level when the block length is very large. Persuaded by exhibition checks occur on the blurred block directed at [10], the maximum cutoff point of encoding [11] and the strong signal cutting boundary [12] and moreover the possibility of the channel boundary drifting being completed for the presentation check of the coded OFDM structure.

II. THEORY

A. COFDM System Model

The structure model of COFDM is shown in Figure 1. It mostly involves transmitters, receivers, and lines as modes of transmission. These three areas are described in focal points in the resulting fragment [2].

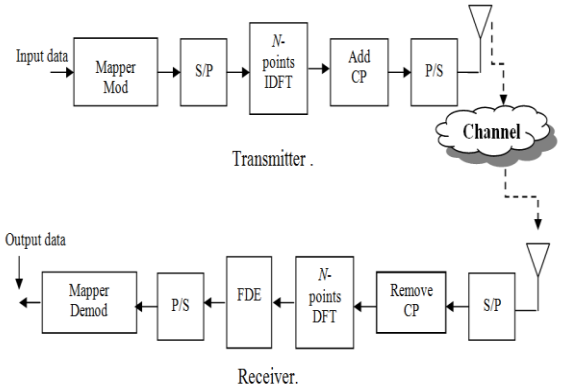

Figure 1. COFDM model system.

B. COFDM transmitter

Multi-transporter transmitters involve a modulator game plan, each with a different transporter frequency. The transmitter at that time unites the modulators, generates and creates a banner that is communicated. Expect that the N data to be communicated is, k = 0, 1, . . . , N-1, where is an erratic number in a given quadrature sufficiency modulation (QAM) star grouping. In line with this, the tweaked mapper takes assessments from sixteen specific assessments from the QAM that appear in Figure.2 [3][4].

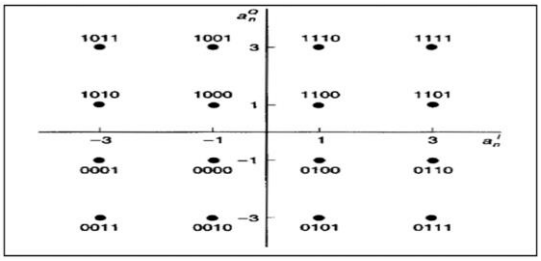

Figure 2 16-ary QAM constellation.

The result of the regulatory mapping is associated with sequential transformations resembling (S/P). S/P changes over sequential information into the same N streams. Given the change in S/P, the transmission time length for the N image is connected to NT. Leaving t=n, where the example stretches, the result of a high-level multi-transporter transmitter is

$$X()=nT_s \sum_{k=0}^{N-1} x_k \, e^{j2\pi f_k nT_s} \quad (1)$$

Furthermore, if the carrier frequency is placed uniformly in the frequency domain with a frequency distance f_s ,=, = 0.1, . . ., N-1, $f_k k f_s k$

$$X()=nT_s \sum_{k=0}^{N-1} x_k \, e^{j2\pi k f_s nT_s} \quad (2)$$

Equation (1) discusses the result of the S/P transformation. Then, the same information test is taken to a reverse discrete Fourier change (IDFT) block to obtain a spacetime OFDM image.

Mhnd Farhan: COFDM System: Overview

In order f_s= 1/(N) $T_s$which is the minimum separation to maintain orthogonality between signals on different modulators, then the OFDM signal is given by:

X(n)=(3)

$$\sum_{k=0}^{N-1} x_k \, e^{j2\pi k\left(\frac{1}{N}\right)n} \quad (3)$$

The above recipe is an N-point IDFT condition. There were two copies of the waveform obtained, one was timely and the other conceded some time. The ISI was provoked given the way the tails of some parts of figure 1 would interfere with the treatment of figure 2. To clean up the ISI, the screen timerange is mostly implanted close to the beginning of each OFDM image [5], [6], and [7].

Cyclic prefix (CP) is the empty space of the ISI because it serves as the space between the moderate images, it also changes during straight convolution with the response of the channel drive to cyclic convolution. When cyclic convolutions in spacetime turn into scalar expansions in repeating regions, the subcarriers remain symmetrical. CP is an exact example of the OFDM image in front of it. Give the opportunity to show the CP length as far as that sample, then the current extended OFDM image has the range Tsys= Tsub + TG

Figure 3 shows two nonstop OFDM images. Screen intervals are longer than the best suspension of multipath channels (think about maintaining symmetry between subcarriers. Because the health of each recognized subcarrier has been validated by CP, its symmetry with all unique subcarriers continues. Just when the length of the protection interval (CP) is set to be more limited than the most excessive delay of the multipath channel, the tail of some part of the OFDM image impacts the head of some part of the accompanying image, reaching the ISI.

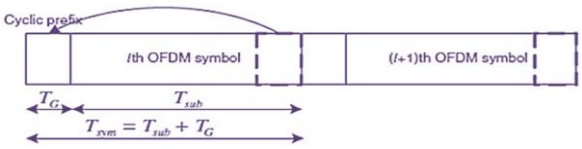

Figure 3 OFDM symbol with CP.

The output equation of the CP block is $\overline{x(n)}$=, $x((n-L))_N$where n=0, ..., N+L-1. Then the output of the CP block is applied in parallel to serial conversion (P/S). P/S converts parallel data into N serial streams [8], and [9].

C. Convolutional Code

Convolutional code is a kind of error revising code that produces an equivalence image through the utilization of sliding abilities of boolean polynomials into the flow of information. Sliding applications address the 'convolution' of encoders over information, which offers an ascent to the term 'convolutional coding.' The sliding mind of the

convolutional code energizes the decomposed lattice using a period invariant lattice. Time invariant lattice translates convolutional code licenses into the most outrageous possibilities of fragile decisions translated with reasonable complexity.

The ability to perform the most outrageous deciphering of the greatest probability decisions is one of the important benefits of convolutional codes. This is not exemplary block code, which is generally handled by a grid of period variations and in this way decisions are usually difficult to translate. Convolutional code is consistently described by the base code level and the depth (or memory) of the encoder [n,k,K]. The base code level is usually given as n/k, where n is the information level and k is the result image level. Its depth is most of the time called the "imperative length" of 'K', where the result is part of the current and subsequent information of the previous K-1 data source. Depth can be similarly given as the sum of the memory parts 'v' in a polynomial or the sum of the best encoder states (generally 2^v) [9].

Convolutional codes are often described as endless. After all, it can be said that convolutional codes have erratic, rather than stable, block lengths, since most of the convolutional coding that can be certified is done on blocks of information. Convolutional coded blocks consistently use endpoints. The inconsistent block length of convolutional code can also be separated into extraordinary block codes, which generally have a fixed block length directed by logarithmic properties.

The code speed of convolutional codes is mostly changed through image penetration. For example, a convolutional code with a code level 'mother' n / k = 1/2 can be penetrated to higher speeds, for example, 7/8 basically by not sending a piece of code image. The exhibition of penetrated convolutional codes as a whole scaled well with a proportion of equality sent. The ability to make fragile decision savings translate on convolutional codes, and moreover the block length and code-level flexibility of convolutional codes, spread the word about them very well for follow-up correspondence [10].

D. Communication Channel

To simplify the mathematical analysis, it is assumed that a time invariant channel that has the following response with a beat of R

$$h^T = [h_0\, h_1 \ldots . h_{R-1}] \tag{4}$$

The impulse response of the channel is circularly convoluted with the transmitted signal due to the CP in the OFDM signal, so the output of the channel is as follows

$$y(n)=\mathrm{h}(n)+ N(\mathrm{n}* \overline{x(n)})$$

$$y(n)=\mathrm{h}(n)+ N(* x\big((n-L)\big)_N \mathrm{n}) \tag{5}$$

$$y(\mathrm{n})=\mathrm{h}(\mathrm{n})\mathrm{x}(\mathrm{n})+N(\mathrm{n})$$

The output of the channel (i.e. the received signal) can be written in matrix form as follows [10]:

$$\begin{bmatrix} \overbrace{0 \;\cdots\; 0}^{N_g-R+1} & h_{R-1} & h_{R-2} & \cdots & h_0 & \overbrace{0 \qquad\qquad\qquad \cdots \; 0}^{N-1} \\ 0 \;\cdots & 0 & h_{R-1} & h_{R-2} & \cdots & h_0 \qquad\qquad \cdots \; 0 \\ & & & & \cdots & \\ 0 & & & & \cdots & 0 \;\; h_{R-1} \;\; h_{R-2} \;\; \cdots \;\; h_0 \end{bmatrix}$$

$$Y = \mathrm{X} + \mathrm{N} \tag{6}$$

At the receiving end, first, the received signal is applied to the S/P conversion. S/P converts serial data into parallel streams. Then the signal received Y= after CP deletion can be expressed as:$[\, y_0 \; y_1 \ldots . y_{N-1} \;]^T$

$$Y = \begin{bmatrix} h_0 & 0 & \cdots & & & 0 & h_{R-1} & h_{R-2} & \cdots & h_1 \\ h_1 & h_0 & 0 & & & \cdots & 0 & h_{R-1} & \cdots & h_2 \\ & & & & & \cdots & & & & \\ h_{R-1} & h_{R-2} & \cdots & h_0 & 0 & & & & \cdots & 0 \\ 0 & h_{R-1} & \cdots & h_1 & h_0 & & & & \cdots & 0 \\ & & & & & \cdots & & & & \\ 0 & \cdots & & & 0 & h_{R-1} & & & \cdots & h_0 \end{bmatrix} \begin{bmatrix} x_0 \\ x_1 \\ \cdot \\ \cdot \\ \cdot \\ \cdot \\ x_{N-1} \end{bmatrix} \mathrm{N}$$

$$Y = QX + N \tag{7}$$

where x consists of the last N element *in* X *and* N is Gaussian noise. Note that the Q circulation matrix can be diagonalized by the DFT and IDFT matrices, resulting in

$$Q = \mathrm{H}\, F^{-1} F \tag{8}$$

where F and are the DFT and IDFT matrices, respectively. The matrix H is a diagonal matrix:F^{-1}

$$\mathbf{H} = \begin{bmatrix} H_0 & 0 & \cdots & 0 \\ 0 & H_1 & \cdots & 0 \\ & \vdots & & \\ 0 & \cdots & 0 & H_{N-1} \end{bmatrix}$$

where each inclined component corresponds to the reaction of the looping chamber channel on the comparison subcarrier.

Note that OFDM changes during convolution in the time region to expansion in the repeat area and subsequently a basic one-tap repetition space .balancer can be used to recover the sent image After DFT, the image is demodulated and decoded to obtain bits of information that are communicated .by demodulation mapping [11–14]

III. SIMULATION RESULTS

Matlab 2017 is used to emulate the COFDM system, with modulation methods such as QPSK, 8-QAM, 16-QAM, 32-QAM, and 64-QAM. Convolutional code is integrated with the model

with the aim of improving framework execution; consequently, OFDM is referred to as OFDM code (COFDM). It was decided to use a convolutional code with octal yielding a polynomial of length 7 (133.171). The vehicle channel in 11 ways is the display of the channel used. Table 1 lists reproduction-related parameters.

Table. 1 COFDM Simulation Parameters.

Parameters	**Value**
FFT Size	512
Cyclic Prefix Length	20 Samples
Time between Samples	24.41 ns
Channel Coding	Convolution Code with Rate=1/2
Modulation Types	QPSK, 8-QAM, 16-QAM, 32-QAM, and 64-QAM
Channel Model	Vehicular Channel with 11Paths

Bit-error-rate (BER) vs. signal-to-noise ratio (SNR) measurements are used to assess how well the entire system is working. Framework execution for uncoded systems is shown in Figures 4 and 5, respectively. It seems that code systems perform better than no-code systems. In addition, QPSK performs better than M-QAM, and performance declines as M grows.

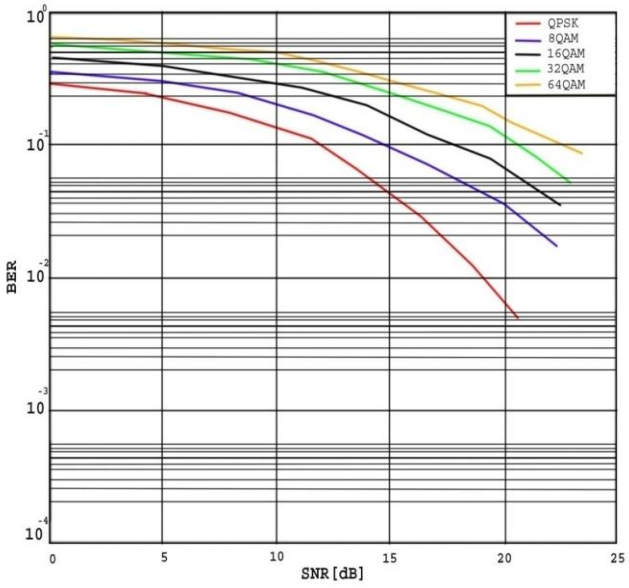

Figure 4 BER performance of un-coded OFDM over multipath fading channel

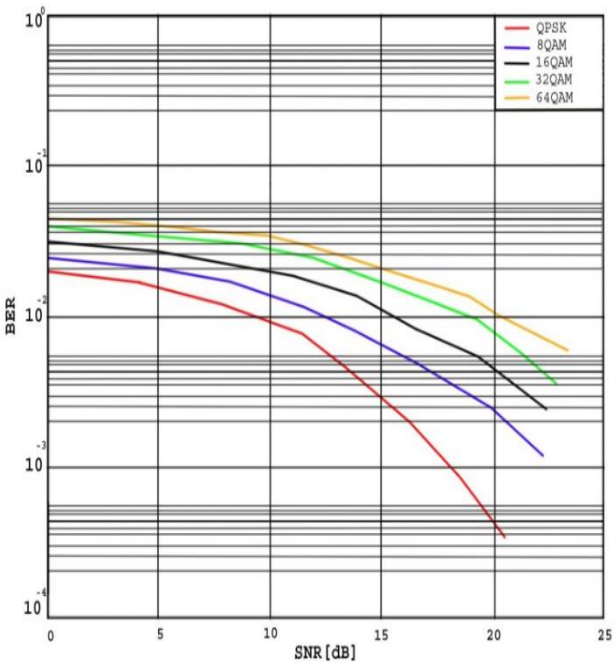

Figure 5 BER performance of COFDM over multipath fading channel.

IV. CONCLUSION

To investigate the performance of COFDM systems through vehicle channels with AWGN utilizing QPSK, 8-QAM, 16-QAM, 32-QAM, and 64-QAM, system models were created. As an error correction code, convolutional technology is used. The results show that COFDM performs better than the uncoded one. In addition, QPSK offers superior performance than M-QAM. In addition, performance suffers as M increases.

REFERENCE

[1] J. Bingham, “Multicarrier Modulation for Data Transmission: An Idea Whose Time Has Come,” IEEE Commun. Mag., vol. 2, no. 5, May, 1990, pp. 5–14.
[2] B. LeFloch, M. Alard, and C. Berrou "Coded Orthogonal Frequency Division Multiplex," Proc. IEEE, vol. 83, June, 1995, pp. 982–96.
[3] B. Stephen, "History of OFDM," IEEE Commun. Mag.,vol. 47, no. 11,Nov., 2009, pp. 26–35.
[4] V. Sharma, "BER performance of OFDM-BPSK,-QPSK,- QAM over AWGN channel using forward Error correcting code," International Journal of Engineering Research and Applications, vol. 2, issue 3, 2012, pp.1619-1624.
[5] Y. Khan, "To Improve Performance of OFDM System Using Optimize Adaptive Coding Technique with Convolutional and BCH Coding," International Journal of Application or Innovation in Engineering & Management, vol. 3, issue 5, May 2014.

[6] B. Alex,"Behavior and Techniques for Improving Performance of OFDM Systems for Wireless communications," International Journal of Advanced Research in Computer and Communication Engineering vol. 4, issue 1, January 2015.
[7] Sachin, "Analyzing the BER Performance of OFDM-System with QPSK and BPSK Modulation Technique," International Journal of Innovative Research in Advanced Engineering, vol. 2. No.6, 2015.
[8] B. Lu, X. Wang, and K. R. Narayanan, "LDPC-based space-time coded OFDMsystems over correlated fading channels: Performance analysis and receiver design," IEEE Trans. Wireless Commun., vol. 1, pp. 213-225, 2002.
[9] H. Kim, "Turbo coded orthogonal frequency division multiplexing for digitalaudio broadcasting," in 2000 IEEE Intern. Confer. on Commun., vol. 1, pp. 420-424.
[10] E. Malkamaki and H. Leib, "Coded diversity on block-fading channels," IEEE Trans. Inform. Theory, vol. 45, pp. 771-781, 1999.
[11] R. G. Gallager, Information Theory and Reliable communication. New York, Wiley, 1968.
[12] S. Arimoto, "On the converse to the coding theorem for discrete memoryless channels," IEEE Personal Commun., vol. IT-19, pp. 357-359, 1973.
[13] N Al-Awad, and M. Al-Rawi" On the Performance of COFDM System," International Journal of Open Information Technologies, vol.6, pp.39-42, 2018.
[14] M. Liu, W. Shen, J. Yan and H. Zeng, "A Simulation Method of Orthogonal Frequency Division Multiplexing," 2022 14th International Conference on Computer Research and Development (ICCRD), Shenzhen, China, pp. 388-393, 2022